A BRIGHTER FUTURE

UK **LED** *lighting*

7 Watt NERUS LED Down Light

LDT /IES files | IP44 | Dimmable | 50,000 hours | CE

Part No.	UKNERUS-F-30-7W-36W
LED Pitch	SharpCOB
CCT	2700k / 3000k / 4000k / 5000k
Lumen CRI 85	520 / 565 / 580 / 600
Beam Angles	20° / 36°/ 50°
Power Consumption	7 Watts
Volt/AC	220-240
Current mA	180
Dimension (mm)	D 80, H 94
Cutout (mm)	76
Finish	White / Black
Warranty	5 Years

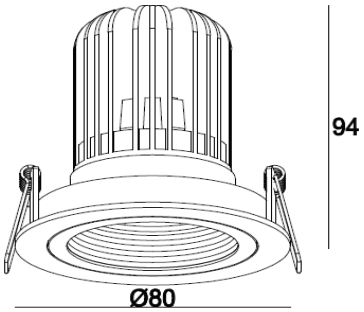

UK LED Down Light NERUS | Watts used | Beam Angle 20°/ 36° / 50°

UKNERUS-F-30-7W-36-W

Fixed | CCT 2700K, 3000K , 4000K, 5000K | Finish - W - White, B - Black

www.ukledlighting.com